CERNIERA MASCHIO STRETTA CON TESTINA SNODATA DIN 648K

NARROW MALE HINGE WITH SPHERICAL HEAD DIN 648K

ISO 15552

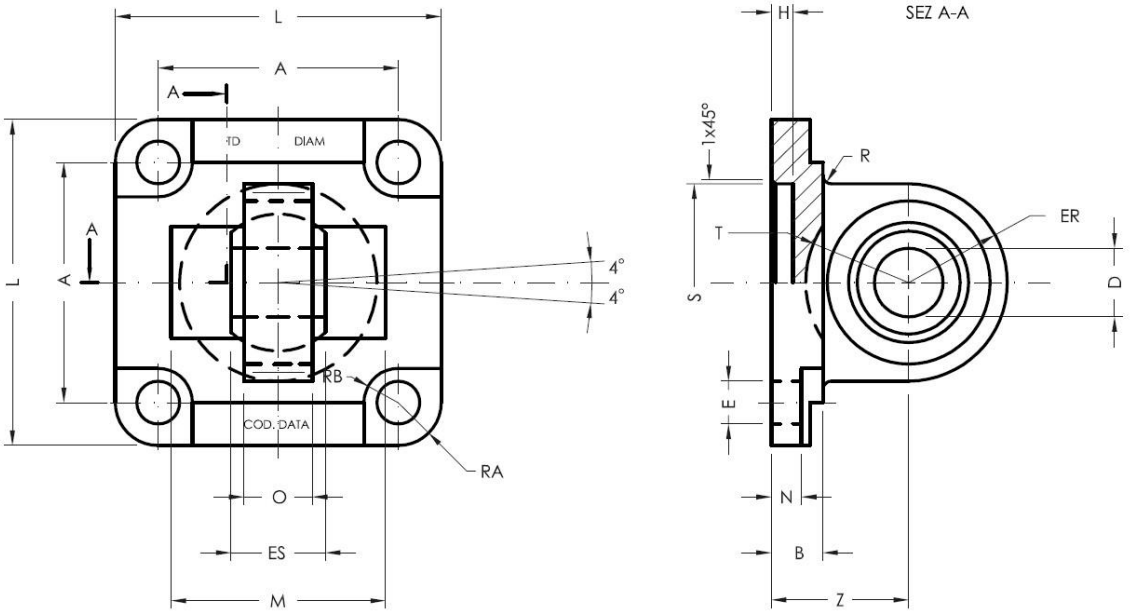

DIAM.	A +0.2 -0.2	O MAX	Z JS15	D H7	ER MAX	S H11	B 0 -0.5	E H14	L +0.5 -0.5	RB +0.5 0	N +0.5 -0.5	H +0.5 0	M +0.5 -0.5	T +0.5 -0.5	RA +0.5 -0.5	R +0.5 -0.5	ES 0 -0.1	NOTE
32	32.5	10.5	22	10	15	30	8	6.6	45	5.5	5.5	5	-	-	6.25	2	14	
40	38	12	25	12	18	35	8	6.6	55	5.5	5.5	5	-	-	8.5	2	16	
50	46.5	15	27	16*	20	40	10	9	65	7.5	6.5	5	51	19	9.25	3	21	* DISPONIBILE ANCHE / AVAILABLE ALSO D=12
63	56.5	15	32	16	23	45	10	9	75	7.5	6.5	5	-	-	9.25	3	21	
80	72	18	36	20*	27	45	13	11	95	9	10	5	70	24	11.5	4	25	* DISPONIBILE ANCHE / AVAILABLE ALSO D=16
100	89	18	41	20	30	55	13	11	115	9	10	5	-	-	13	4	25	
125	110	25	50	30*	40	60	16	13.5	140	10	10	7	102	35	15	5	37	* DISPONIBILE ANCHE / AVAILABLE ALSO D=25
160	140	28	55	35	42	65	20	18	180	13	10	7	-	-	20	-	43	
200	175	28	60	35	42	75	20	18	220	13	11	7	-	-	22	-	43	
250	220	35	70	40	52	90	25	22	270	16.5	11	11	-	-	25	-	49	ON DEMAND
320	270	45	80	50	62	110	30	26	350	19.5	15	11	170	56	40	-	60	ON DEMAND

S03

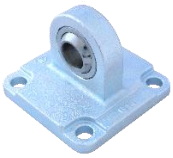

DIAMETRO DIAMETER	PESO (KG) WEIGHT (KG)	CODICE BASE BASE CODE
32	0,126	S03032
40	0,207	S03040
50	0,332	S03050
63	0,485	S03063
80	1,005	S03080
100	1,468	S03100
125	3,040	S03125
160	6,100	S03160
200	8,800	S03200
250		S03250
320		S03320

* DISPONIBILE ANCHE CON TRATTAMENTO DI ZINCATURA BIANCA / AVAILABLE ALSO WITH TREATMENT OF WHITE ZINC COATING

TRATTAMENTO: CATAFORESI NERA *

TREATMENT: BLACK CATAPHORESIS *

MATERIALE: ACCIAIO

MATERIAL: STEEL